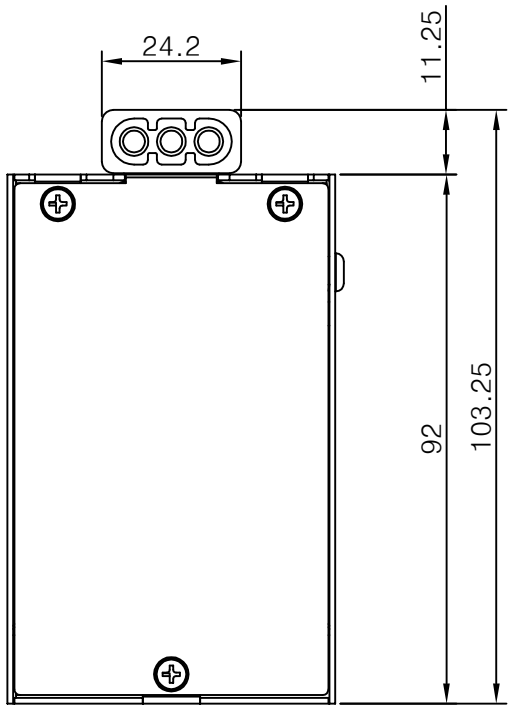

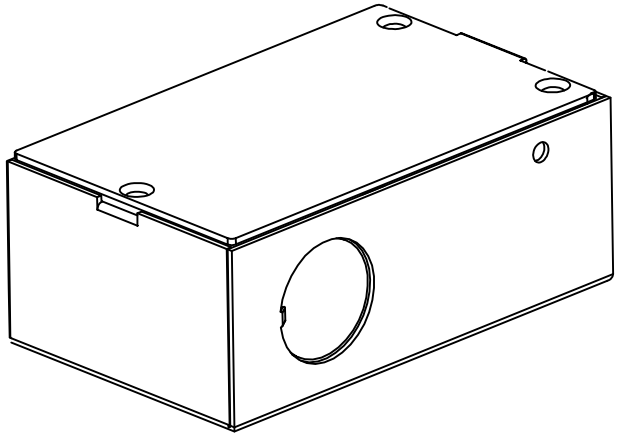

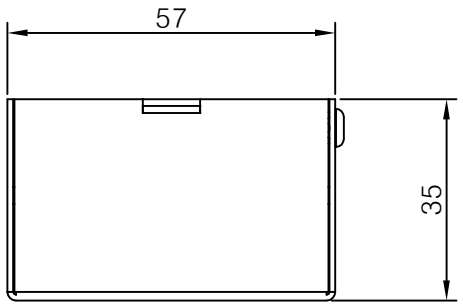

FEELUX Feelux Lighting Co., Ltd. (주) 필룩스	DRAWING TITLE	DATE	SCALE
	MHWB-ESL CONSTRUCTION		NONE